DIMENSIONS

8602-03-20
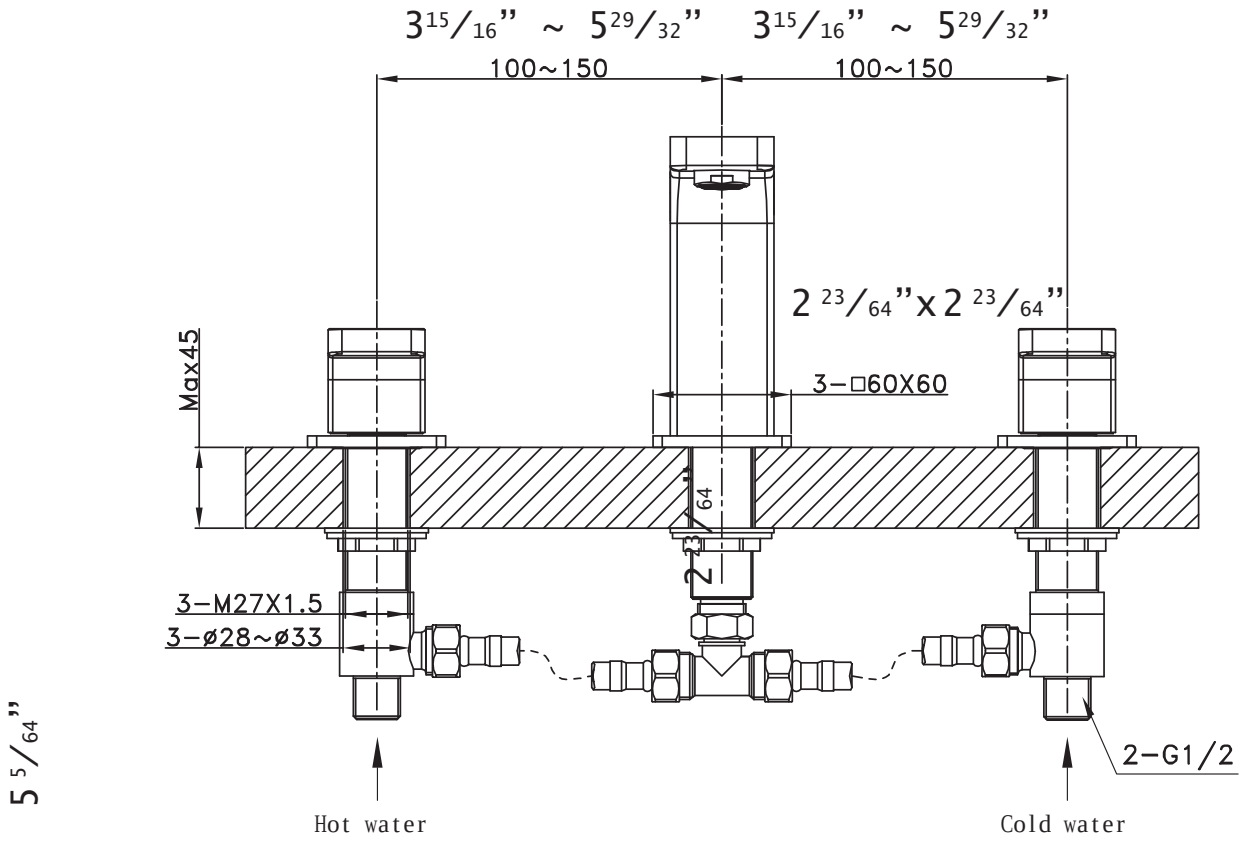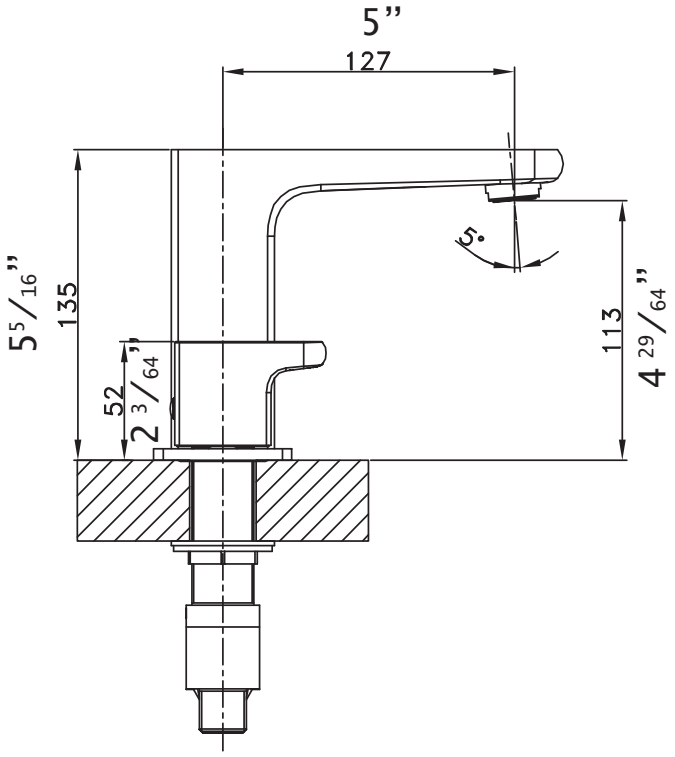
IVY